PRAGA 2,5kg (1)

FEATURES

- ✓ *Winding filters with polyester resin and fiberglass.*
- ✓ *Totally anticorrosive.*
- ✓ *Made of plastic top lid.*
- ✓ *Fitted with collector arms and diffuser made from unplasticised PVC and polypropilene.*
- ✓ *Resistance to salted water.*
- ✓ *Contains newly designed larger and more resistant ABS collector arms.*
- ✓ *Filter bed height: 1m.*
- ✓ *Maximum temperature: 50ºC.*
- ✓ *Maximum pressure 2.5 bar.*

CARACTERÍSTICAS

- ✓ *Filtros bobinados en poliéster y fibra de vidrio.*
- ✓ *Totalmente anticorrosivo.*
- ✓ *Tapa superior de plástico.*
- ✓ *Montado con brazos colectores y difusor de material plástico inalterable PVC y polipropileno.*
- ✓ *Resistente al agua salada.*
- ✓ *Novedad en brazos colectores ABS, más resistentes y de mayor tamaño,*
- ✓ *Temperatura máxima: 50ºC.*
- ✓ *Presión máxima 2.5 bar.*

Code		00687	00694	00707	00688	00702	00689	00696	00703	00690	00697	00710	00691	00698	00705	00711	33312
Model (mm)		**1050**			**1200**		**1400**			**1600**			**1800**				
Connections	inch	2"	2 ½"	3"	2 ½"	3"	2 ½"	3"	4"	3"	4"	4 ½"	3"	4"	4 ½"	5"	6"
	mm	63	75	90	75	90	75	90	110	90	110	125	90	110	125	140	160
Filtering velocity ($m^3/h/m^2$)		20	30/40	50	20/30	40/50	20	30	40/50	20	30/40	50	20	30	40	50	
Filtration Area (m^2)		0.86			1.13		1.54			2.01			2.54				
Flow (m^3/h)		17	25/34	43	22/33	45/56	30	46	61/77	40	60/80	100	50	76	101	125	
Maximum pressure (bar)		2.5															
Sand (0.4-0.8mm) (kg)		950			1375		1650			2150			2800				
Gravel(1-2mm)(kg)		300					450			675			750				
Weight in service (kg)		2000			2700		3700			4900			6100				
Volume (l)		1050			1500		2000			2600			3400				
H (mm)		1640			1780		1755			1835			1875				
M (mm)		645			640		610			515			465				
N (mm)		540			570		585			680			720				
P (mm)		755			940		1085			1230			1370				

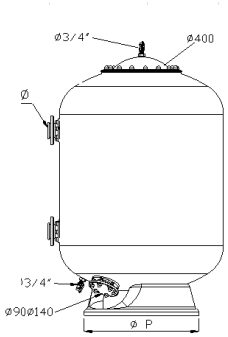

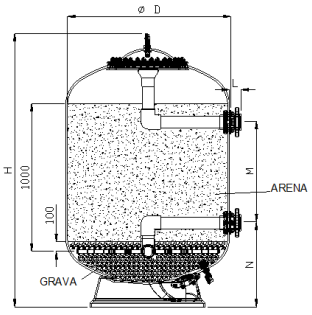

PACKAGING

Code	00687	00694	00707	00688	00702	00689	00696	00703	00690	00697	00710	00691	00698	00705	00711	33312
Model (mm)	**1050**			**1200**		**1400**			**1600**			**1800**				
Standard units	**1**															
Box dimension (m)	1.15x1.15x1.85			1.30x1.30x1.97		1.55x1.55x1.98			1.75x1.75x2			1.9x1.9x2.01				
Volume (m^3)	2.446			3.3329		4.756			6.125			7.256				
Weight (kg)	130			165		213			270			300				

PRAGA 2,5kg (2)

FEATURES

- ✓*Winding filters with polyester resin and fiberglass.*
- ✓*Totally anticorrosive.*
- ✓*Made of plastic top lid.*
- ✓*Fitted with collector arms and diffuser made from unplasticised PVC and polypropilene.*
- ✓*Resistance to salted water.*
- ✓*Contains newly designed larger and more resistant ABS collector arms.*
- ✓*Filter bed height: 1m.*
- ✓*Maximum temperature: 50ºC.*
- ✓*Maximum pressure 2.5 bar.*

CARACTERÍSTICAS

- ✓*Filtros bobinados en poliéster y fibra de vidrio.*
- ✓*Totalmente anticorrosivo.*
- ✓*Tapa superior de plástico.*
- ✓*Montado con brazos colectores y difusor de material plástico inalterable PVC y polipropileno.*
- ✓*Resistente al agua salada.*
- ✓*Novedad en brazos colectores ABS, más resistentes y de mayor tamaño,*
- ✓*Temperatura máxima: 50ºC.*
- ✓*Presión máxima 2.5 bar.*

Code		00692	00699	00706	05083	56937	56938	00693	00700	04935	08695	08696	08697	08699	08700	08701
Model (mm)		**2000**				**2200**		**2350**			**2500**			**3000**		
Connections	*inch*	4"	4 ½"	5"	6"	5"	6"	4 ½"	5"	6"	5"	6"	7"	6"	7"	8"
	mm	110	125	140	160	140	160	125	140	160	140	160	200	160	200	225
Filtering velocity ($m^3/h/m^2$)		20	30	40	50	30	40	20	30	40	20	30	40	20	30	40
Filtration Area (m^2)		3.14				3.8		4.34			4.9			7.07		
Flow (m^3/h)		62	94	125	157	114	152	87	130	175	100	150	200	140	212	282
Maximum pressure (bar)		2.5														
Sand (0.4-0.8mm) (kg)		3800				4650		5275			5950			8600		
Gravel(1-2mm)(kg)		1050				1900		1800			2200			3300		
Weight in service (kg)		7900				11200		12550			13760			20200		
Volume (l)		4400				6520		8045			9050			12800		
H (mm)		2040				2390		2520			2550			2750		
M (mm)		510						600			450			440		
N (mm)		790				950		965			1080			1100		
P (mm)		1550				1830		1859			2000			2365		

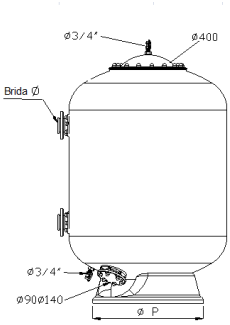

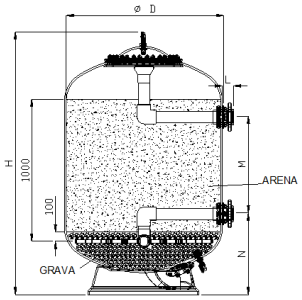

PACKAGING

Code	00692	00699	00706	05083	56937	56938	00693	00700	04935	08695	08696	08697	08699	08700	08701
Model (mm)	**2000**				**2200**		**2350**			**2500**			**3000**		
Standard units	**1**														
Box dimension (m)	2.1x2.1x2.25				2.3x2.3x2.64		2.66x2.40x2.67			2.82x2.56x2.77			3.20x3.06x2.90		
Volume (m^3)	9.92				14		17.04			19.99			28.39		
Weight (kg)	370				470		530			780			1350		

PRAGA 4kg (1)

FEATURES

- ✓ *Winding filters with polyester resin and fiberglass.*
- ✓ *Totally anticorrosive.*
- ✓ *Made of plastic top lid.*
- ✓ *Fitted with collector arms and diffuser made from unplasticised PVC and polypropilene.*
- ✓ *Resistance to salted water.*
- ✓ *Contains newly designed larger and more resistant ABS collector arms.*
- ✓ *Filter bed height: 1m.*
- ✓ *Maximum temperature: 50ºC.*
- ✓ *Maximum pressure 4 bar.*

CARACTERÍSTICAS

- ✓ *Filtros bobinados en poliéster y fibra de vidrio.*
- ✓ *Totalmente anticorrosivo.*
- ✓ *Tapa superior de plástico.*
- ✓ *Montado con brazos colectores y difusor de material plástico inalterable PVC y polipropileno.*
- ✓ *Resistente al agua salada.*
- ✓ *Novedad en brazos colectores ABS, más resistentes y de mayor tamaño,*
- ✓ *Temperatura máxima: 50ºC.*
- ✓ *Presión máxima 4 bar.*

Code		09209	00712	00724	00713	00719	09210	00714	00720	09211	00715	00727	09212	00716	00722	00728
Model (mm)		**1050**			**1200**		**1400**			**1600**			**1800**			
Connections	inch	2"	2 ½"	3"	2 ½"	3"	2 ½"	3"	4"	3"	4"	4 ½"	3"	4"	4 ½"	5"
	mm	63	75	90	75	90	75	90	110	90	110	125	90	110	125	140
Filtering velocity ($m^3/h/m^2$)		20	30/40	50	20/30	40/50	20	30	40/50	20	30/40	50	20	30	40	50
Filtration Area (m^2)		0.86			1.13		1.54			2.01			2.54			
Flow (m^3/h)		17	25/34	43	22/33	45/56	30	46	61/77	40	60/80	100	50	76	101	125
Maximum pressure (bar)		4														
Sand (0.4-0.8mm) (kg)		950			1375		1650			2150			2800			
Gravel(1-2mm)(kg)		300					450			675			750			
Weight in service (kg)		2025			2750		3787			4960			6100			
Volume (l)		1050			1500		2000			2600			3400			
H (mm)		1640			1780		1755			1835			1875			
M (mm)		645			640		610			515			465			
N (mm)		540			570		585			680			720			
P (mm)		755			940		1085			1230			1370			

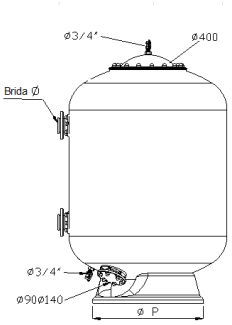

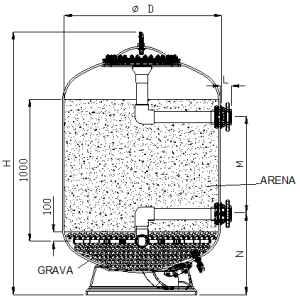

PACKAGING

Code	09209	00712	00724	00713	00719	09210	00714	00720	09211	00715	00727	09212	00716	00722	00728
Model (mm)	**1050**			**1200**		**1400**			**1600**			**1800**			
Standard units	**1**														
Box dimension (m)	1.15x1.15x1.85			1.30x1.30x1.97		1.55x1.55x1.98			1.75x1.75x2			1.9x1.9x2.01			
Volume (m^3)	2.446			3.3329		4.756			6.125			7.256			
Weight (kg)	155			215		300			330						

PRAGA 4kg (2)

FEATURES

- ✓*Winding filters with polyester resin and fiberglass.*
- ✓*Totally anticorrosive.*
- ✓*Made of plastic top lid.*
- ✓*Fitted with collector arms and diffuser made from unplasticised PVC and polypropilene.*
- ✓*Resistance to salted water.*
- ✓*Contains newly designed larger and more resistant ABS collector arms.*
- ✓*Filter bed height: 1m.*
- ✓*Maximum temperature: 50ºC.*
- ✓*Maximum pressure 4 bar.*

CARACTERÍSTICAS

- ✓*Filtros bobinados en poliéster y fibra de vidrio.*
- ✓*Totalmente anticorrosivo.*
- ✓*Tapa superior de plástico.*
- ✓*Montado con brazos colectores y difusor de material plástico inalterable PVC y polipropileno.*
- ✓*Resistente al agua salada.*
- ✓*Novedad en brazos colectores ABS, más resistentes y de mayor tamaño,*
- ✓*Temperatura máxima: 50ºC.*
- ✓*Presión máxima 4 bar.*

Code		09213	00717	00723	05132	57812	57813	09214	09217	09220	09215	09218	09221	09216	09219	09222
Model (mm)		**2000**				**2200**		**2350**			**2500**			**3000**		
Connections	*Inch*	4"	4 ½"	5"	6"	5"	6"	4 ½"	5"	6"	5"	6"	7"	6"	7"	8"
	mm	110	125	140	160	140	160	125	140	160	140	160	200	160	200	225
Filtering velocity ($m^3/h/m^2$)		20	30	40	50	30	40	20	30	40	20	30	40	20	30	40
Filtration Area (m^2)		3.14				3.8		4.34			4.9			7.07		
Flow (m^3/h)		62	94	125	157	114	152	87	130	175	100	150	200	140	212	282
Maximum pressure (bar)		4														
Sand (0.4-0.8mm) (kg)		3800				4650		5275			5950			8600		
Gravel(1-2mm)(kg)		1050				1900		1800			2200			3300		
Weight in service (kg)		8005				11310		12650			13910			20490		
Volume (l)		4400				6520		8045			9050			12800		
H (mm)		2040				2390		2520			2550			2750		
M (mm)		510						600			450			440		
N (mm)		790				950		965			1080			1100		
P (mm)		1550				1830		1859			2000			2365		

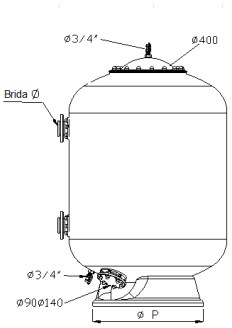

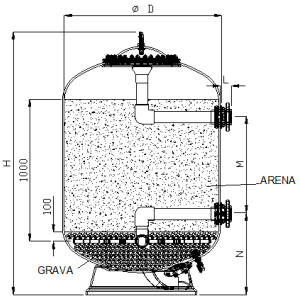

PACKAGING

Code	09213	00717	00723	05132	57812	57813	09214	09217	09220	09215	09218	09221	09216	09219	09222
Model (mm)	**2000**				**2200**		**2350**			**2500**			**3000**		
Standard units	**1**														
Box dimension (m)	2.1x2.1x2.25				2.3x2.3x2.64		2.66x2.40x2.67			2.82x2.56x2.77			3.20x3.06x2.90		
Volume (m^3)	9.92				14		17.04			19.99			28.39		
Weight (kg)	475				560		630			930			1630		